CNC CONTROL BOX

User manual Rev. 1

1. Features

- ***Connect up to 3 servo or stepper motors.***
- ***Full featured Industrial quality DC servodrive.***
- ***32 bit PID control with 16 bit RISC processor in each axis.***
- ***Manual Pulse Generator throught the LPT2 port.***
- ***For use with mach3.***
- ***Can be used for Lathes, Mills, Routers, Lasers, Plasma, Engravers.***

2. Specifications.

Main Voltage Input (VAC)	110V
Main voltage for motors (VDC)	48V
Continuous Current per Axis (A)	12
Peak Current per axis (A)	15
Length (in) / (mm)	
Width (in) / (mm)	11/ 280
Height (in) / (mm)	20/510
Weight (lbs) / (kg)	

Table 1. Box specifications.

3. Box description

3.1 Front view description.

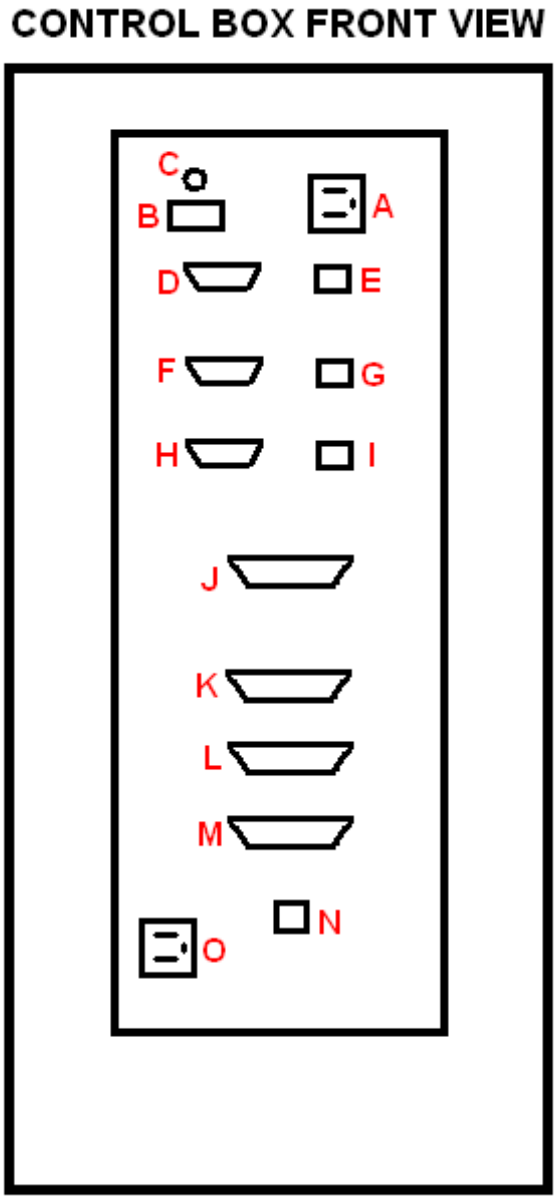

Figure 1. Control Box front view

The above figure shows the front view of the CNC control box. In the Table 2 is shown the function of each connector.

CONTROL BOX FRONTAL VIEW	
REF. LETTER	**DESCRIPTION**
A	MAIN POWER INPUT CONNECTOR (110VAC)
B	MAIN POWER SWITCH
C	PUMP FUSE
D	AXIS X ENCODER
E	POWER OUTPUT CONNECTOR FOR AXIS X
F	AXIS Y ENCODER
G	POWER OUTPUT CONNECTOR FOR AXIS Y
H	AXIS Z ENCODER
I	POWER OUTPUT CONNECTOR FOR AXIS Z
J	LPT1 DB25 CONNECTOR
K	PENDANT DB25 CONNECTOR
L	LPT2 DB25 CONNECTOR
M	SPEED CONTROLLER DB25 CONNECTOR
N	LIMIT SWITCH RJ45 CONNECTOR
O	OUTPUT VOLTAGE CONNECTOR FOR PUMP (110VAC)

Table 2. Frontal view description

3.2 Internal Lateral view description.

The above figure shows the internal lateral view of the CNC control box, corresponding to the components distribution inside the box. In the Table 3 is shown the function of each connector in that view and their reference names (**RN)** to be used in the internal connections described in the Table 4.

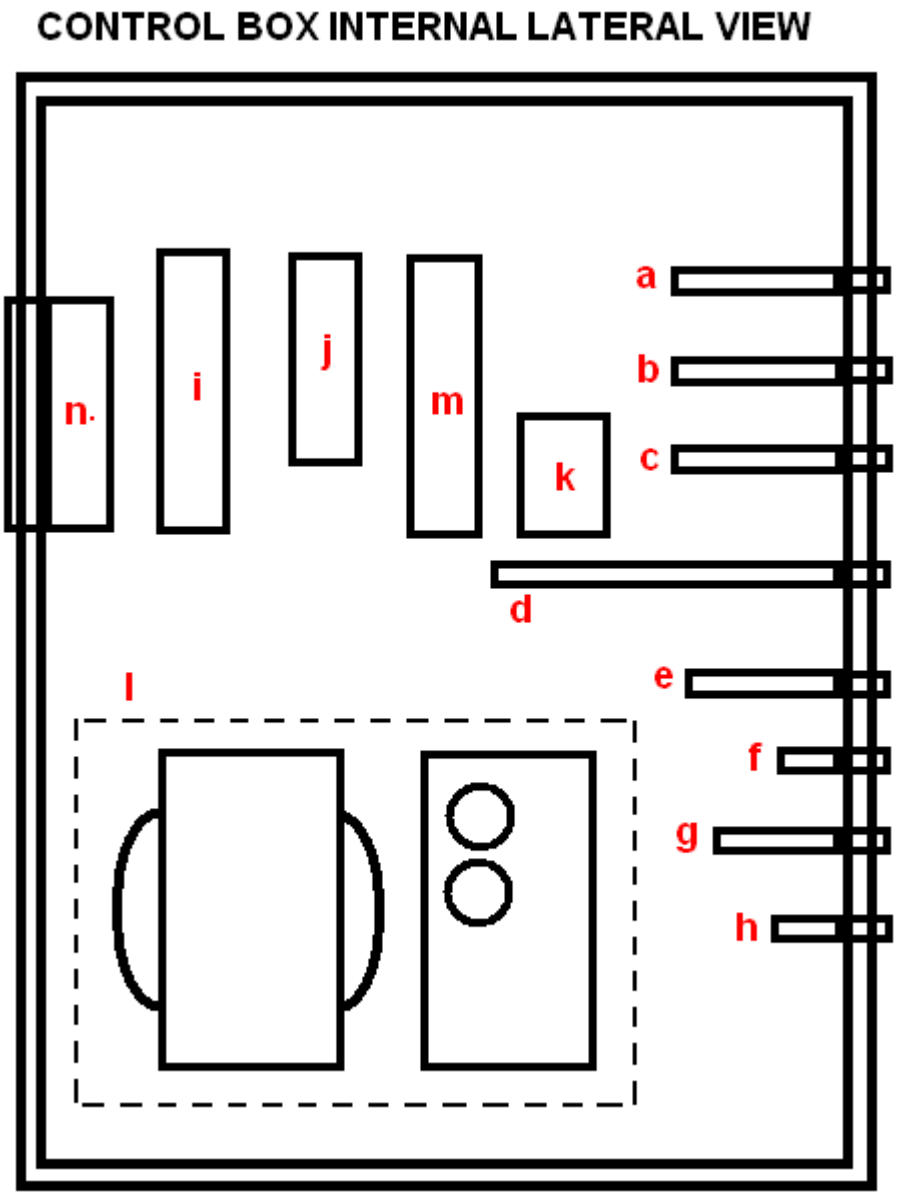

Figure 2. Control Box internal lateral view.

CONTROL BOX LATERAL VIEW		
REF. LETTER	**DESCRIPCTION**	**REF. NAME**
a	Axis X Driver (Viper 75)	Viper X
b	Axis Y Driver (Viper 75)	Viper Y
c	Axis Z Driver (Viper 75)	Viper Z
d	Multifunction Breakout Board	C11G
e	Pendant Interface Card	C22
f	LPT2 Expansion Port	LPT2
g	Parallel Port Breakout Board	C13
h	RJ45 Breakout Board	C27
i	24VDC@2A Power Supply *	24VDC P.S.
j	12VDC@1.5A Power Supply *	12VDC P.S.
k	5VDC@2.5A Power Supply *	5VDC P.S.
l	48VDC Power Supply *	48VDC P.S.
m	Fan *	
n	Extractor Fan *	

*All those components are connected to 110VAC

Table 3. Internal components description

4.2.1 Viper 75 Stepper-Servo-Motor Drive.

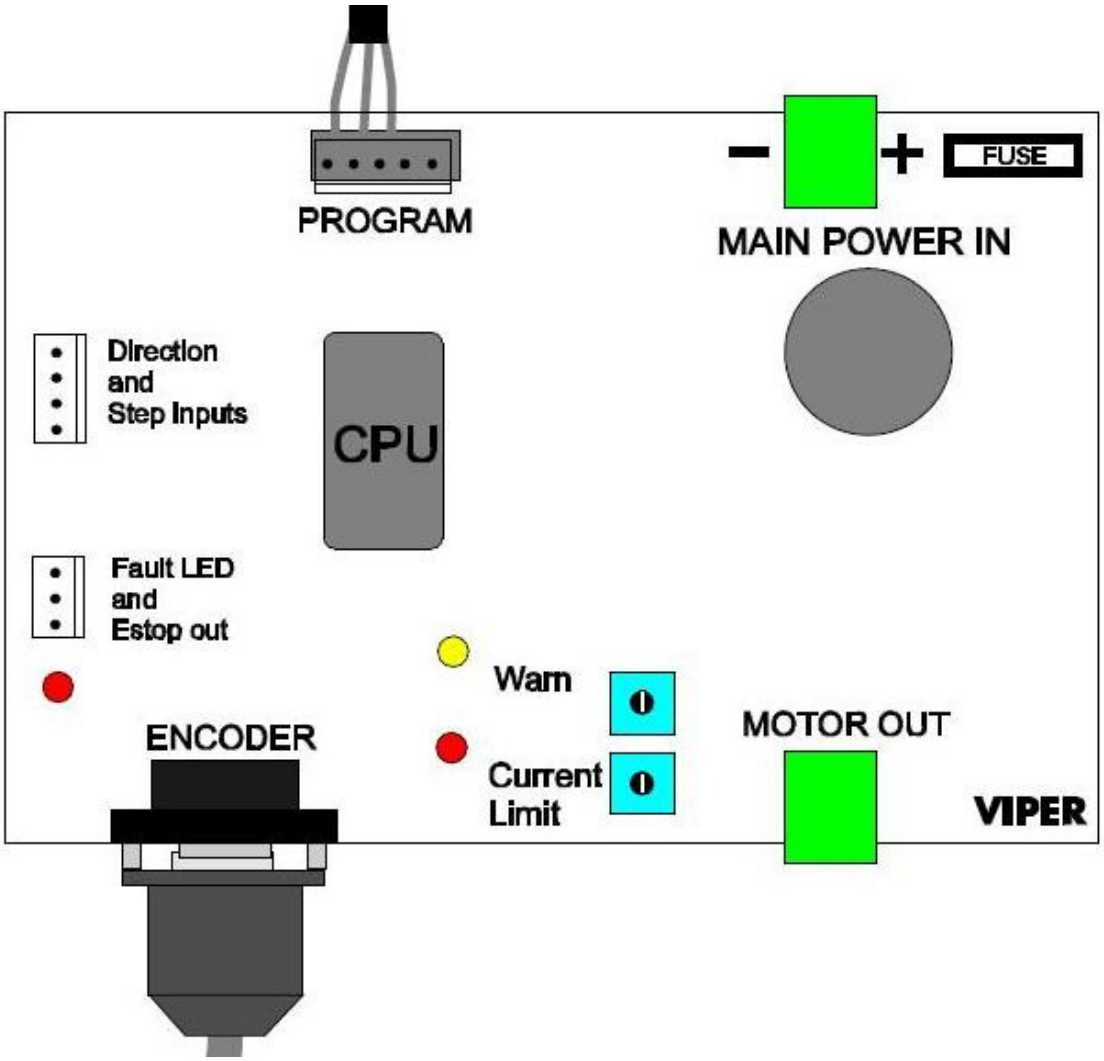

Figure 3. Viper 75 motor driver.

To see more information go to the link:

http://www.larkencnc.com/dloads/viper-manual.pdf

3.2.1 C11G Multifunction Breakout Board.

This card has been designed to provide a flexible interface and functions to your computer projects, by using the parallel port control software. It manages the step and direction signal and send them to the motor drivers, has an optoisolated analog 0-10VDC output that will convert a step signal into an analog signal that can be used to command a commercial VFD. It has an microcontroller based SCHP.

To get more information go to the link:
http://cnc4pc.com/Tech_Docs/C11GR7_1_User_Manual.pdf

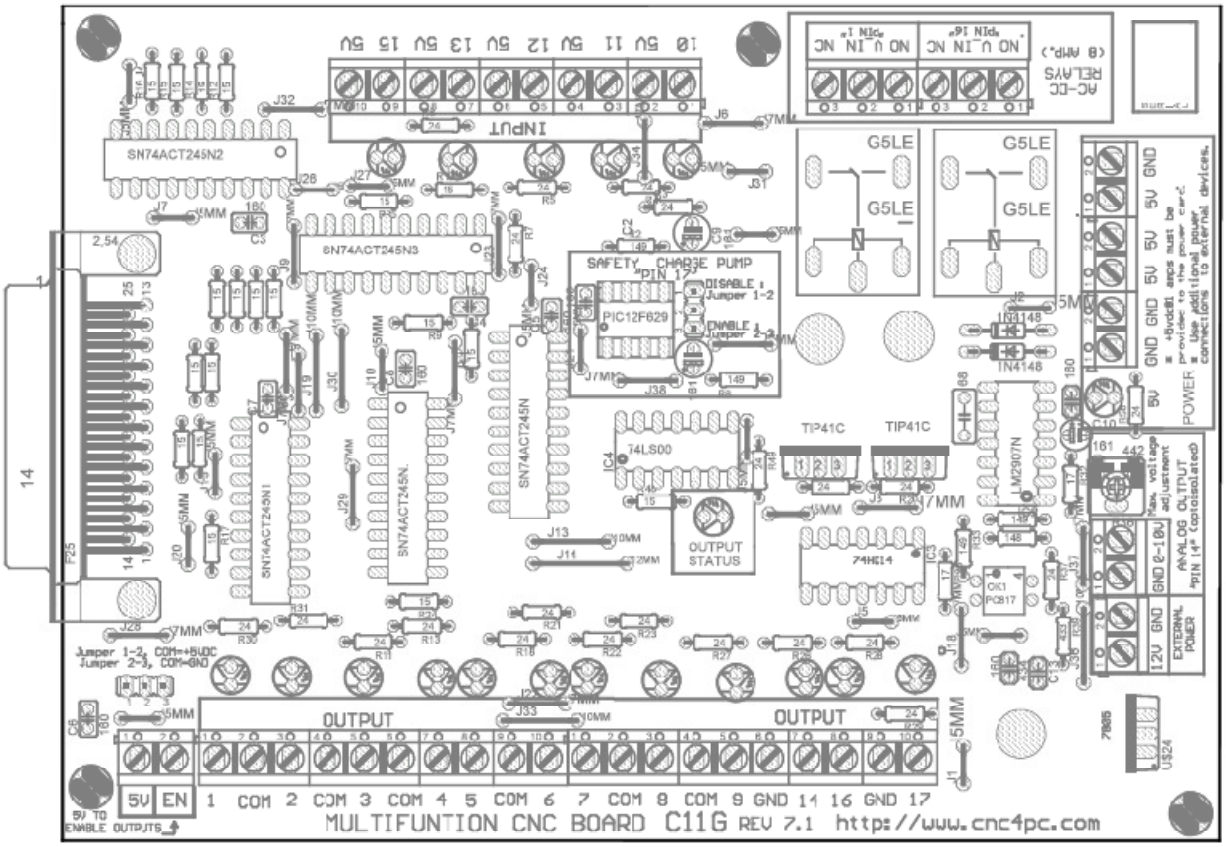

Figure 4. C11G Breakout Board

3.2.2 C22 Pendant Interface Board

This board serves as an interface board for the pendants provided by CNC4PC (MPG2,MPG3, and MPG4). The board conditions the signals (buffer) and provides power to the pendant. The board also has a relay that reflects the status of the E-stop button on the pendant so hardware e-stop functions can be implemented.

To get more information go to the link:
http://cnc4pc.com/Tech_Docs/C22-Pendant_Interface_Board_Rev2.pdf

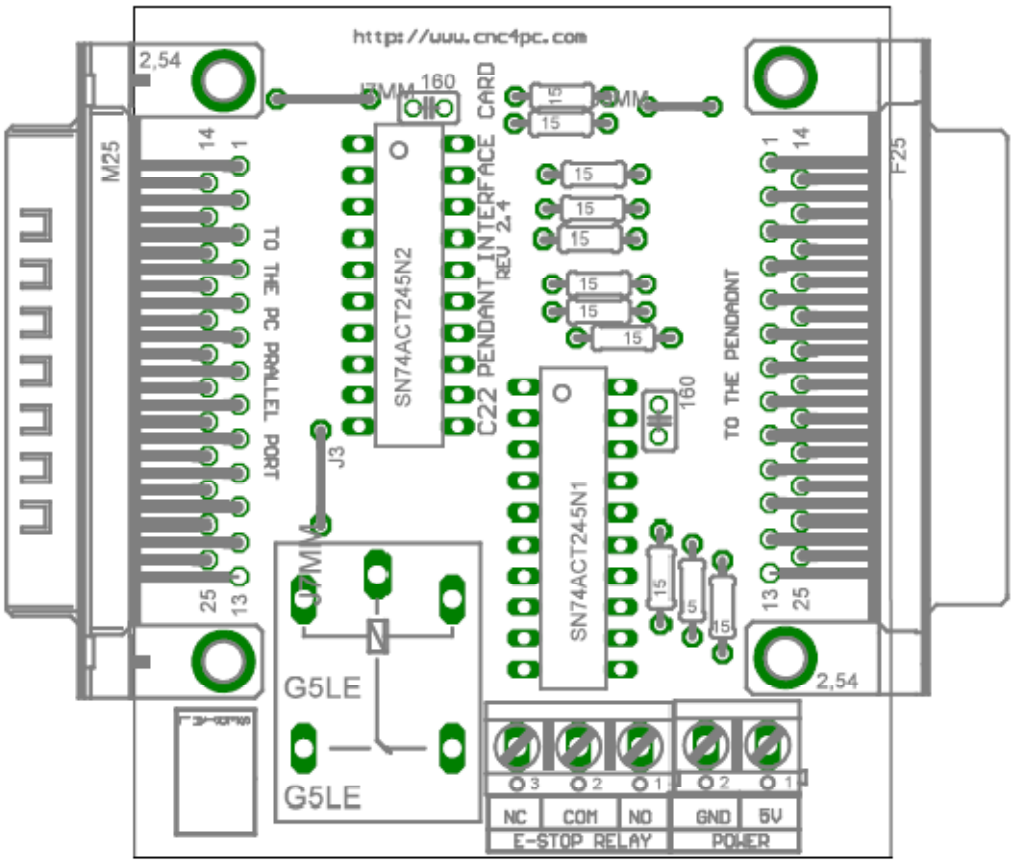

Figure 5. C22 Pendant Interface Board

Instructions for setting up the MPG can be found here:

http://cnc4pc.com/Tech_Docs/guide_for_MPG4_over_LPT2.htm.

3.2.3 C13 Parallel Port Breakout Board

This is a basic breakout board. It provides screw-on terminals to pins 1-25 and ground of the parallel port. It comes with a females DB25 connector.

To get more information go to the link:
http://www.cnc4pc.com/Store/osc/product_info.php?cPath=33&products_id=131

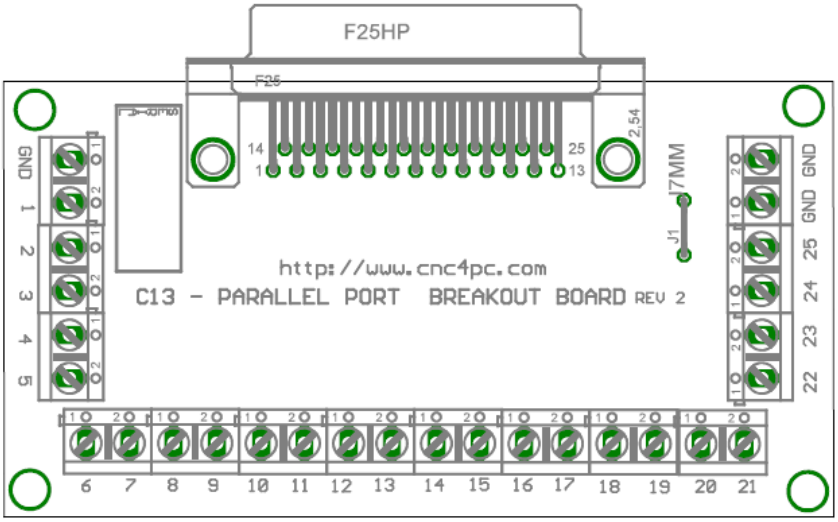

Figure 6. C13 Parallel Port Breakout Board

3.2.4 C27 RJ45 Breakout Board

This is a basic Ethernet RJ45 breakout board. It provides screw-on terminals to pins 1-8. It is used to get the signal coming from the limits switches.

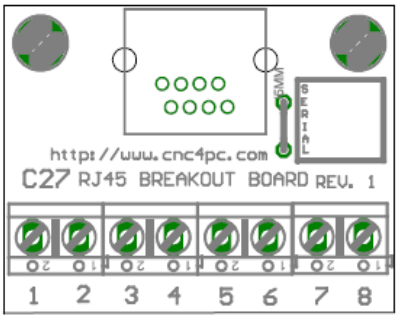

Figure 7. C27 RJ45 Breakout Board

4. Wiring description

The internal components of CNC control box are interconnected. Wires are marked with a Reference Number (**REF. NUM.**)

Please refer to the table at the end of the document.

Table 5. Internal connections description

- All the DC power voltage lines have one or two digits plus the letter **V. Example**: 24VDC has a Reference Number **24V.**
- All the DC grounds, excepting the 12VDC power supply Ground, have Reference Number **0V.**
- The 12VDC power supply ground is isolated and may not be common with other grounds in the box. It reference Number is **0V12**.
- All the logic signals has one or two digits without the letter **V**
- The 110VAC power voltage lines have 3 digits plus the letter **V.**

5. Tuning the drivers

The drivers have been previously tuned, but this tuning can be modified. These are the values used:

Parameter	Axis X Driver	Axis Y Driver	Axis Z Driver
Kp	700	700	700
Ki	2	2	2
Kd	2700	2600	2400
lp	1	1	1
ra	150	150	150
ju	0002	0002	0002
ba	0000	0000	0000
hy	0000	0000	0000
cl	0400	0400	0400

To see more information go to the link:

http://www.larkencnc.com/dloads/viper-manual.pdf

Disclaimer:
Use caution. CNC machines could be dangerous machines. DUNCAN USA, LLC or Arturo Duncan are not liable for any accidents resulting from the improper use of these devices. The CNC control box is not a fail-safe device, and it should not be used in life support systems or in other devices where its failure or possible erratic operation could cause property damage, bodily injury or loss of life.

CNC CONTROL BOX CONNECTIONS											
DESCRIPTION	C11G	Viper X	Viper Y	Viper Z	C22	C27	C13	24VDC P.S	5VDC P.S.	12VDC P.S.	48VDC P.S.	REF. NUM.
Axis X Step Signal	2	X Step										1
Axis X Direction signal	3	X Dir										2
Axis Y Step Signal	4		Y Step									3
Axis Y Direction signal	5		Y Dir									4
Axis Z Step Signal	6			Step Z								5
Axis Z Direction signal	7			Dir. Z								6
Common signal for the axis X Step and Dir. (+5V)	COM	+ 5V X Axis										7
Common signal for the axis Y Step and Dir. (+5V)	COM		+ 5V Y Axis									7
Common signal for the axis Z Step and Dir. (+5V)	COM			+ 5V Z Axis								7
E-stop Signal	10				V_IN (RELAY)							8
C11G outputs enable	EN				V_IN (RELAY)							8
X Axis Home	11					2						9
Y Axis Home	12					3						10
Z Axis Home	13					4						11
X Axis Fault Signal *		X Fault			NO (RELAY)							12
Y Axis Fault Signal *			Y Fault		NO (RELAY)							12
Z Axis Fault Signal *				Z Fault	NO (RELAY)							12
24VDC	Pin 16 Relay (V_IN)							24VDC OUT				24V
Enable signal for the speed controller	Pin 16 Relay (NO)						14					13
Ground								GND				0V
Common signal for the Speed controller							13	GND				0V
24VDC power supply Ground							1	GND				0V
Analog output	Analog Out. (0-10V)						23					14
Analog output Ground	GND An. Out						10					0V12
12VDC	12V An. Out									12VDC OUT		12V
12VDC power supply Ground	GND An. Out									GND (12V)		0V12
5VDC	5V Power				5V Power				5VDC OUT			5V
Ground	GND Power				GND Power				GND			0V
5V for limits	5V inputs					7						5V
limits input	15					5						15
Ground	GND Power					1						0V
48VDC		Main Power	Main Power	Main Power							48VDC OUT	48V
48VDC power supply Ground		Main Power GND	Main Power GND	Main Power GND				GND	GND		GND	0V
110VAC Phase	Pin 1 Relay (V_IN)											101V
Pump Phase	Pin 1 Relay (NO)											102
Pump Neutral **												100V

* It is required connect an external 1KΩ pull up resistor to 5V to get that signal.
** Comes directly from the neutral 110VAC power connection.

CNC4PC
Integration Solutions for CNC Projects