INDEX PULSE BOARD
WIRING GUIDE
C3 REV5.1

Cable Colors
A = RED
K/E = Bare (GND)
E= White

E = Emitter
D = Detector

A=Anode, K=Cathode=Collector, E=Emitter

OUTPUT:
The output signal comes through this terminal.

External Power:
The board requiers an external +5vdc power supply to operate.

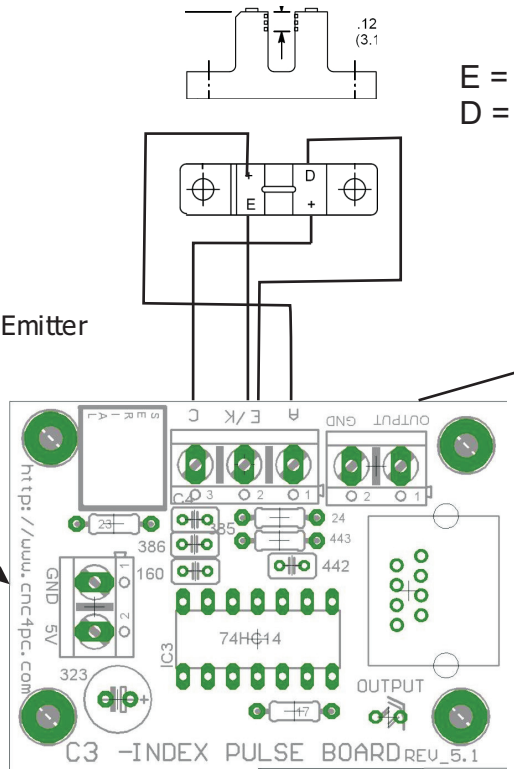

5/5/2009 cnc4pc.com